430141-B Adapter Block VT-21, DATASHEET

REVISIONS				
REV	DESCRIPTION	DATE	BY	APPR
A	Initial Release	06/06/08		
B	CREATED DATASHEET TO MATCH REV B BRACKET	03/09/2023	CH	

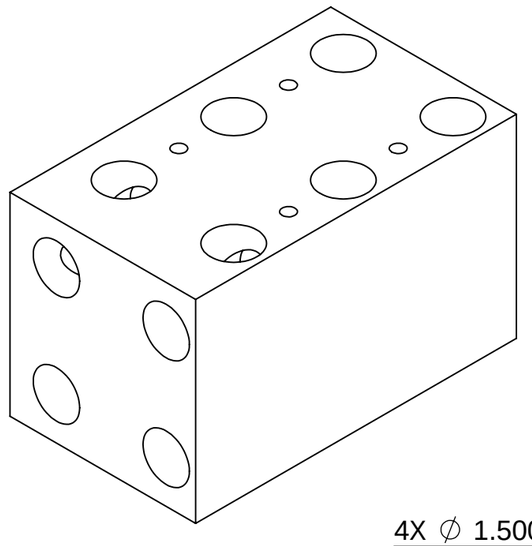

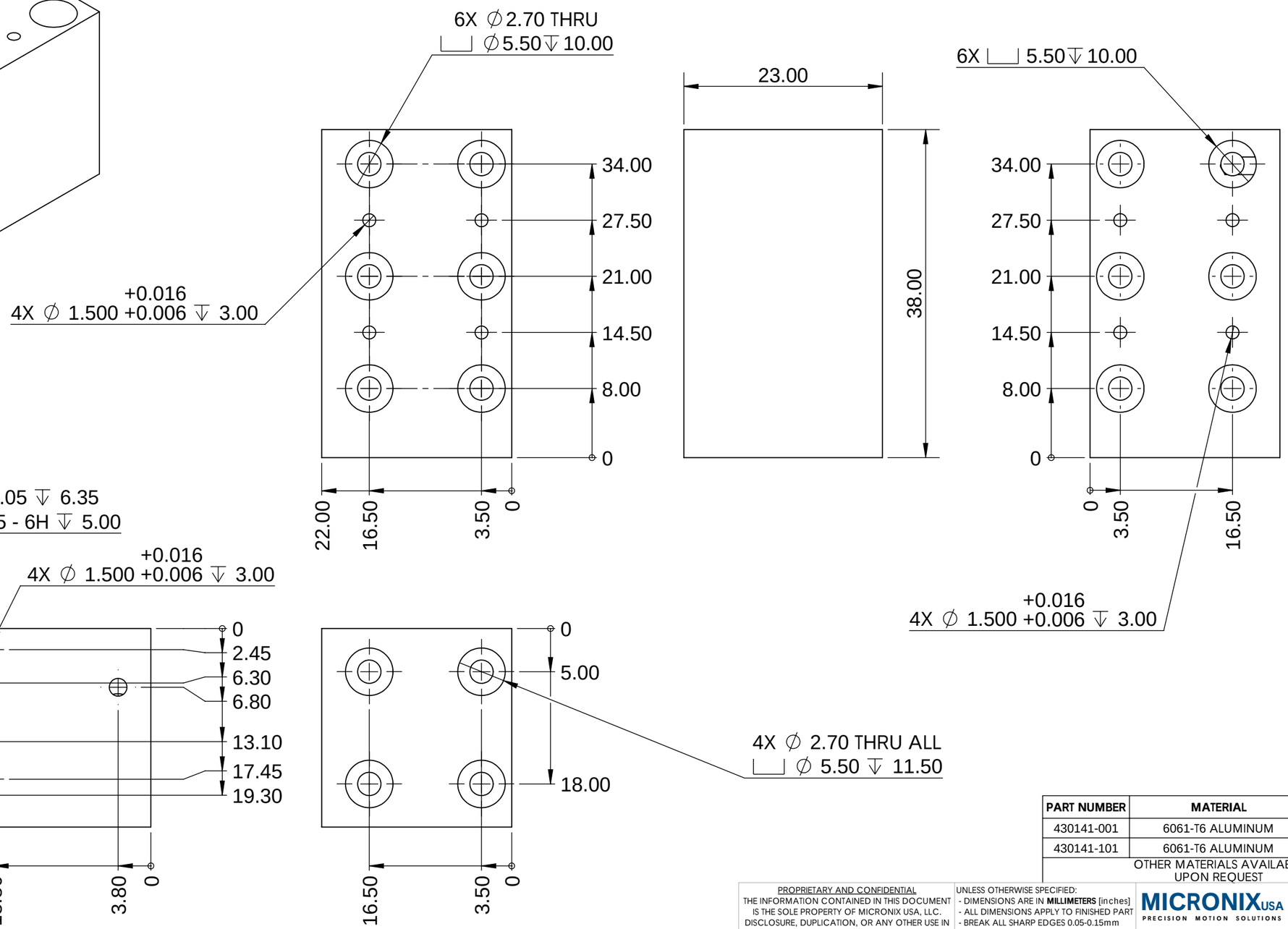

PART NUMBER	MATERIAL	FINISH
430141-001	6061-T6 ALUMINUM	NONE
430141-101	6061-T6 ALUMINUM	BLACK ANODIZED
OTHER MATERIALS AVAILABLE UPON REQUEST		

PROPRIETARY AND CONFIDENTIAL
THE INFORMATION CONTAINED IN THIS DOCUMENT IS THE SOLE PROPERTY OF MICRONIX USA, LLC. DISCLOSURE, DUPLICATION, OR ANY OTHER USE IN PART OR AS A WHOLE WITHOUT THE PRIOR WRITTEN PERMISSION OF MICRONIX USA, LLC IS PROHIBITED.

UNLESS OTHERWISE SPECIFIED:
- DIMENSIONS ARE IN **MILLIMETERS** [inches]
- ALL DIMENSIONS APPLY TO FINISHED PART
- BREAK ALL SHARP EDGES 0.05-0.15mm

TOLERANCES: X.X ± 0.125 [0.005]; X.XX ± 0.050 [0.002]; X.XXX ± 0.025 [0.001]; ANGLES ± 0.5°

MICRONIX USA
PRECISION MOTION SOLUTIONS
11555 COLEY RIVER CIRCLE
FOUNTAIN VALLEY, CA 92708
(949) 480-0538
www.micronixusa.com

MATERIAL: SEE MATERIAL TABLE

HEAT TREATMENT: NONE

SURFACE FINISH: 1.6 σm#

DO NOT SCALE DRAWING

DRAWN: CH DATE: 03/09/2023

CHECKED DATE

ENG APPR. DATE

TITLE: Adapter Block VT-21, DATASHEET

DWG NO. 430141 REV B

SIZE B METRIC THIRD ANGLE SCALE 2:1 SHEET 1/1