VT-21 Series

Linear Positioning Stage

Reference Manual

(Open and Closed Loop Versions)

micronix USA
PRECISION MOTION SOLUTIONS

VT-21

Linear Stage

Reference Manual

Rev 3.08

MICRONIX USA, LLC
Tel: 949-480-0538
Fax: 949-480-0538
Email: info@micronixusa.com
http://micronixusa.com

Contents

1. Introduction **3**
1.1 Product Description 3
1.2 Recommended Controllers 4
1.3 Technical Data 4
1.4 Load Characteristics 4
2. Model Configurations **5**
2.1 VT-21 Order Numbers 5
3. Preparing to Install the VT-21 **6**
3.1 Installation Preparation 6
3.2 Package Contents 6
4. Installing the VT-21 **7**
4.1 VT-21 10mm Installation 7
4.1.1 Base Mounting 7
4.1.2 Side Mounting 8
4.1.3 Front Mounting 8
4.2 VT-21 26mm Installation 9
4.2.1 Base Mounting 9
4.2.2 Side Mounting 10
4.2.3 Front Mounting 10
5. Connecting the VT-21 **11**
5.1 Atmospheric Environments 11
5.1.1 Open Loop Installation 11
5.1.2 Closed Loop/Encoder Installation & Wiring Diagram 11
5.2 Vacuum Environments 12
5.2.1 Handling and Preparation 12
5.2.2 Open loop Installation & Wiring Diagram 12
5.2.3 Closed Loop/Encoder Installation & Wiring Diagram 13
6. Dimensions **14**
6.1 Dimensions 14
6.1.1 VT-21 10mm 14
6.1.2 VT-21 26mm 14
7. Stacking Configurations **15**
7.1 Configuration Examples 15
8. Supplementary Information **17**
8.1 Maintenance 17

8.2 Accessories 17
8.3 Units and Conventions 17
A. Appendix 18
A.1 Technical Specifications 18
A.1.1 Electrical Connections 18
A.1.2 Limit Switches 19
A.1.3 Direction of Motion 19
A.2 Open Loop Vacuum Wiring Diagram 20
A.2.1 Straight Through 9-Pin Feed Through 20
A.3 Using an Analog Encoder 21
A.3.1 Analog Encoder Overview 21
A.3.2 Operating and Electrical Specifications 21
A.3.3 Analog Output (Pins 1, 2, 6, and 7) 21
A.3.4 Index Window (Pins 3) 21
A.3.5 Resolution 22
A.3.6 Analog Encoder Wiring Diagram 22
A.3.7 Straight Through 15-Pin Feed Through 22
A.4 Using the Encoder Module 23
A.4.1 Encoder Module Overview 23
A.4.2 Encoder Module Pinout 23
A.4.3 Operating and Electrical Specifications 23
A.4.4 Output Signals 24
A.4.5 Digital Encoder Wiring Diagram 25
A.4.6 Straight Through 15-Pin Feed Through 25

1. Introduction

1.1 Product Description

The VT-21 is an affordable compact linear stage designed specifically for limited space applications. The stage utilizes a 2-phase stepper motor and is equipped with two mechanical switches. A pre-loaded ball slide creates high stiffness and superior performance. The VT-21 is available with an optional linear encoder with 50 nm resolution. The stages can be mounted in XY or XYZ configuration in a space-saving arrangement. Versions capable of operation in vacuum (10^{-6} mbar) are available.

Features:

- Travel ranges of 10 and 26 mm
- Load capacity up to 1kg
- Integrated mechanical limit switches
- Optional linear encoder with 50 nm closed loop resolution

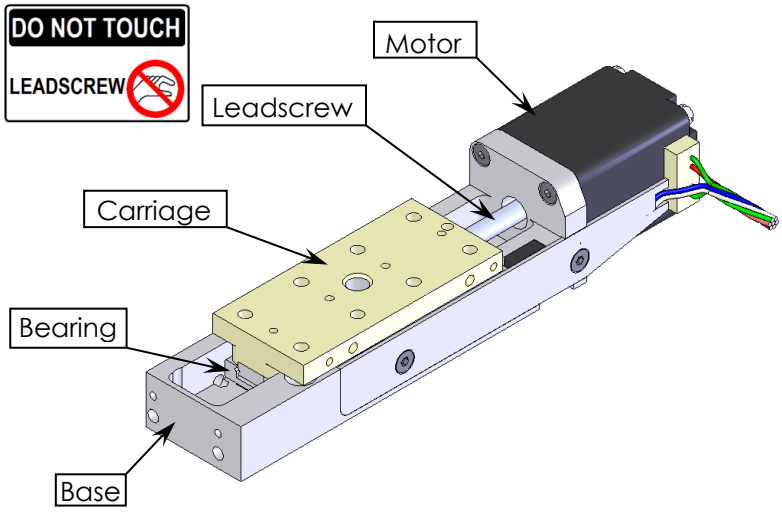

VT-21 26mm Open Loop Version
(Shown at center of travel)

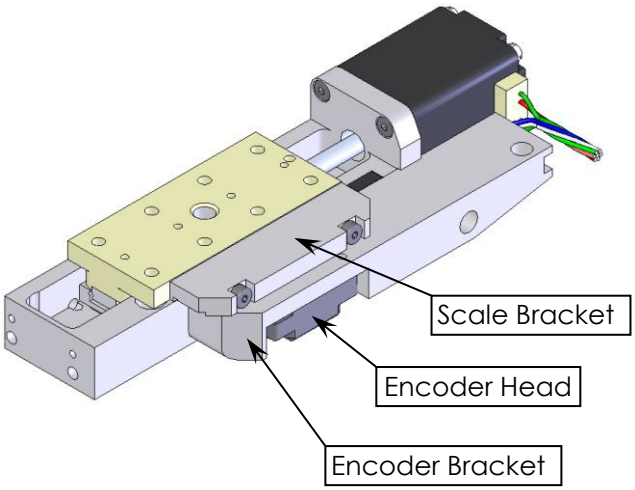

VT-21 26mm Closed Loop/Encoder Version
(Shown at center of travel)

1.2 Recommended Controllers

The following controllers are available from MICRONIX USA:

- MMC-200

1.3 Technical Data

Motor (Pitch 0.5mm)	SM-001
Speed Max. (mm/sec)	> 5
Resolution Typical (μm)	0.5 (Open Loop), 0.05 (Closed Loop), 0.5 (Closed Loop Low Cost)
Bi-directional Repeatability (μm)	± 4 (Open Loop); ± 0.2 (Closed Loop), ±1(Closed Loop Low Cost)
Uni-directional Repeatability (μm)	0.5 (Open Loop); 0.2 (Closed Loop), 1(Closed Loop Low Cost)

1.4 Load Characteristics

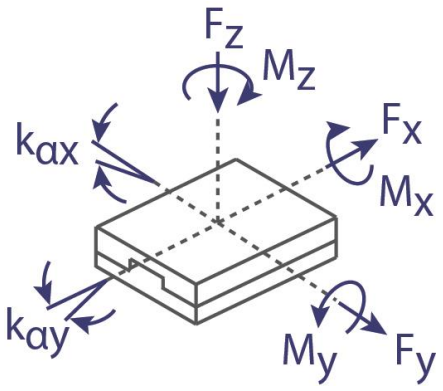

Load Characteristics	Fx(N)	Fy(N)	Fz(N)	Mx(Nm)	My(Nm)	Mz(Nm)	kax [μrad/Nm]	kay [μrad/Nm]
SM-001	10	10	10	0.4	0.6	0.5	-	-

2. Model Configurations

2.1 VT-21 Order Numbers

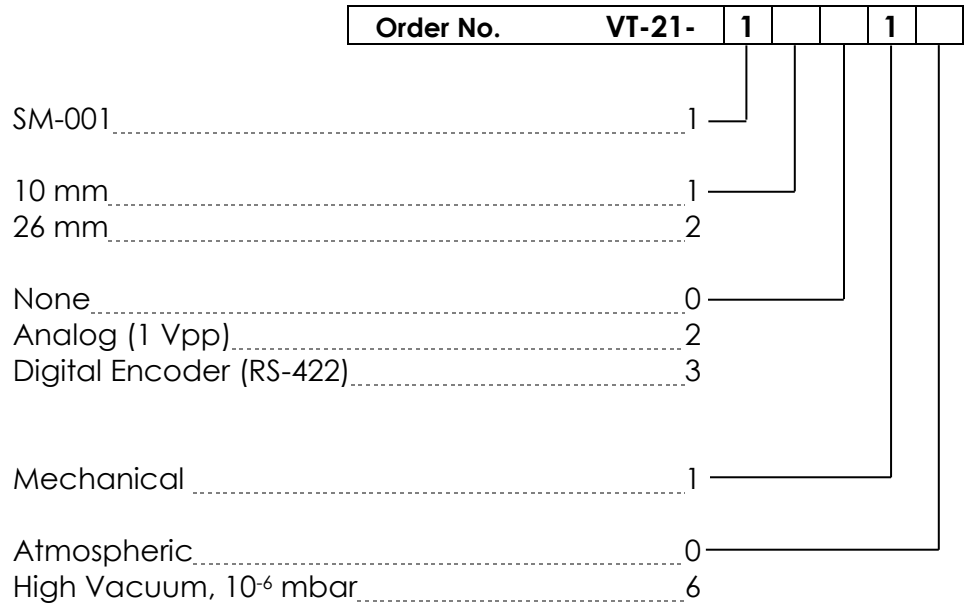

* Other resolutions available upon request.
** Low cost encoder not available in high vacuum.

Contact MICRONIX USA for custom version and stacking configurations.

3. Preparing to Install the VT-21

3.1 Installation Preparation

When mounting the stage, it is important to consider the flatness of the mounting surface, as the stage will conform to the shape of that mounting surface. A surface that is not flat can adversely affect the performance and structural integrity of the stage.

The stage is calibrated and guaranteed to be within specification at 20°C ± 5°C. Be sure to use the stage under the following conditions:

- Mount to a clean and flat surface that is free of debris, burrs or dings
- Store and operate within an indoor atmosphere free of corrosive gases, excessive dust, and condensation
- Operate within a temperature range of 0-40°C
- Store and operate at relative humidity between 20-80%
- Locate away from water, heat, and electrical noise

3.2 Package Contents

If product is damaged or there are missing components, contact MICRONIX USA immediately. Do not discard product packaging in case of return shipment.

Package Should Contain:

- VT-21 Linear Stage
- Reference Manual
- Any other previously agreed upon components such as a controller and cable

4. Installing the VT-21

All mounting patterns require M2.5 socket head cap screws for mounting and M1.5 x 5mm dowel pins for precision alignment. If mounting to the base, it may be necessary to move the carriage via the controller in order to access the base mounting holes. Additional brackets may be needed for custom applications. **Caution: Do not manually actuate the leadscrew.**

4.1 VT-21S 10mm Installation

4.1.1 *Base Mounting*

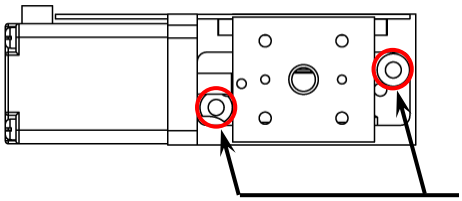

Mounting Pattern A
Thru Hole, 5 mm min screw length

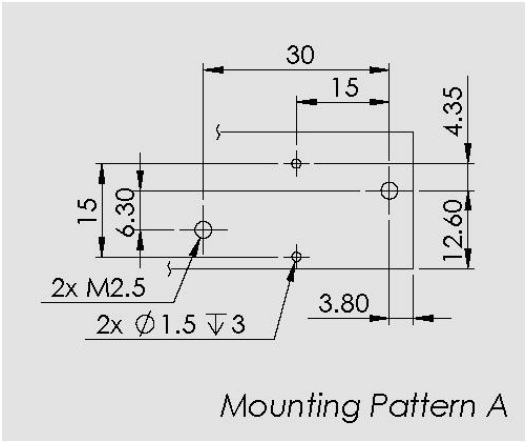

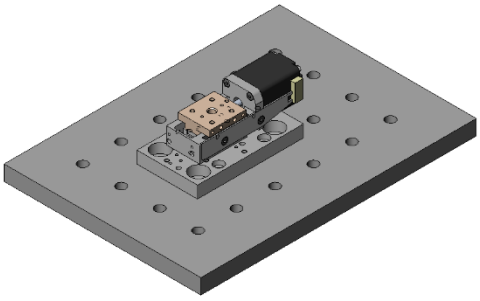

Possible base mount using mounting pattern A

4.1.2 *Side Mounting*

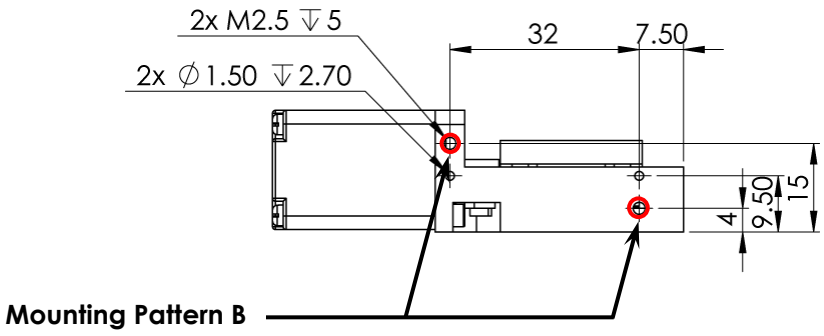

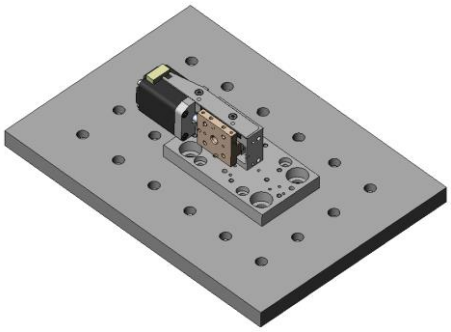

Possible side mount using mounting pattern B

4.1.3 *Front Mounting*

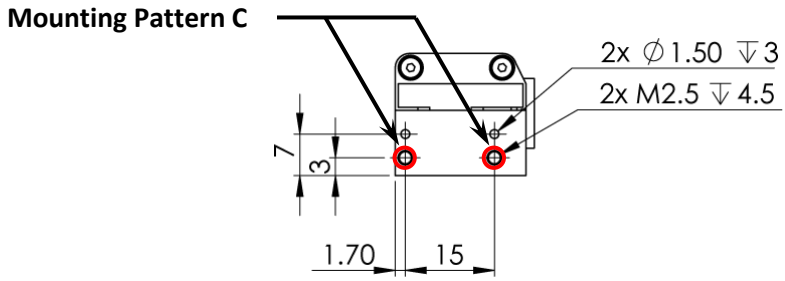

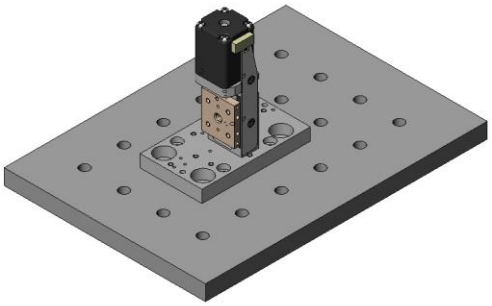

Possible front mount using mounting pattern C

4.2 VT-21L 26mm Installation

4.2.1 *Base Mounting*

Use mounting pattern A for general table mounting and pattern B for vertical table mounting or when mounting to another VT-21 26mm stage. See section 7, *Stacking Configurations,* for examples.

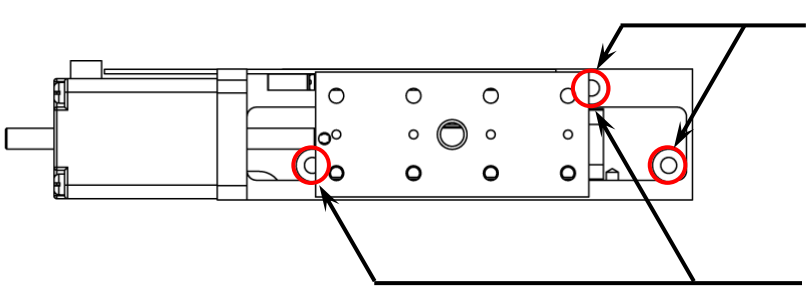

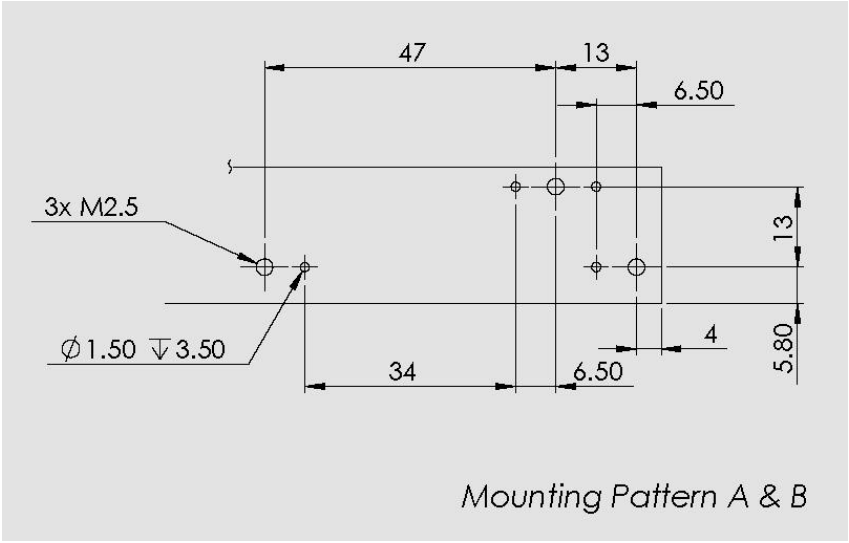

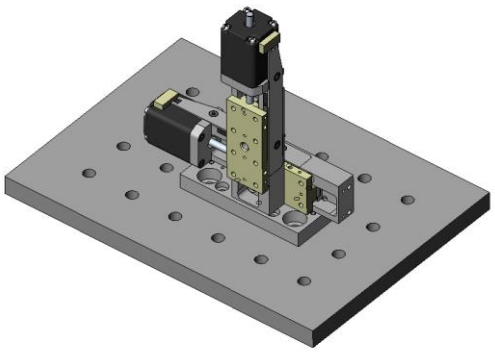

Possible base mount
using mounting pattern B

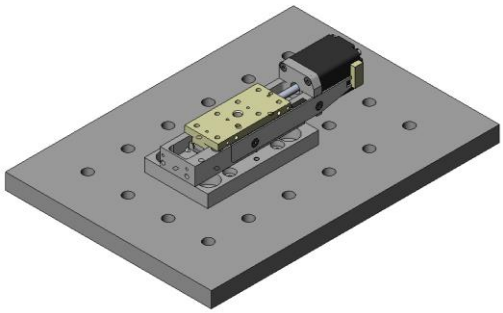

Possible base mount using
mounting pattern A

4.2.2 *Side Mounting*

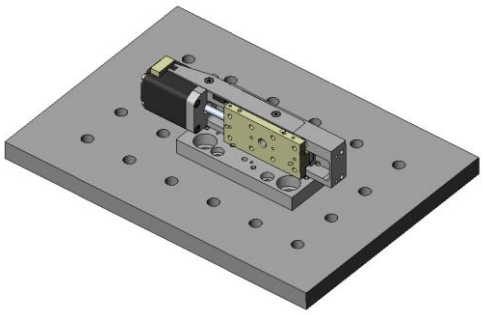

Possible side mount using mounting pattern C

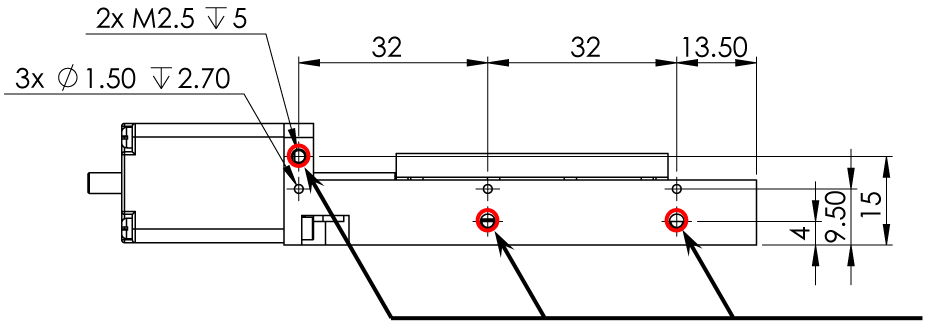

Mounting Pattern C

4.2.3 *Front Mounting*

Mounting Pattern D

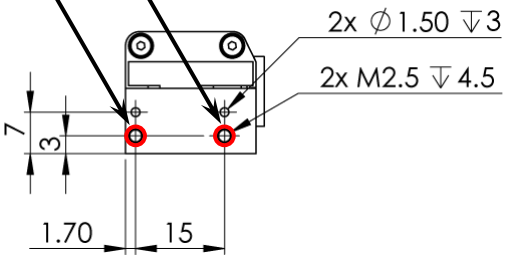

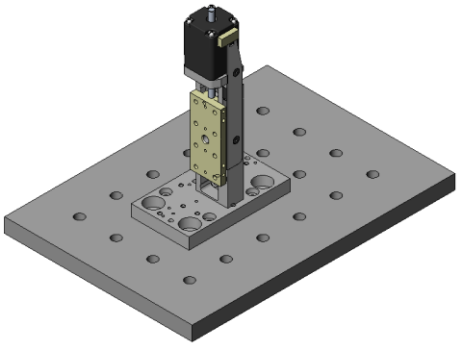

Possible front mount using mounting pattern D

5. Connecting the VT-21

5.1 Atmospheric Environments

The VT-21 is black anodized for atmospheric environments. This allows for a harder surface finish and greater durability over the life of the stage.

5.1.1 Open Loop Installation

Connecting the VT-21 in an open loop only requires that the motor cable be connected to a compatible controller. No other cables or components are required.

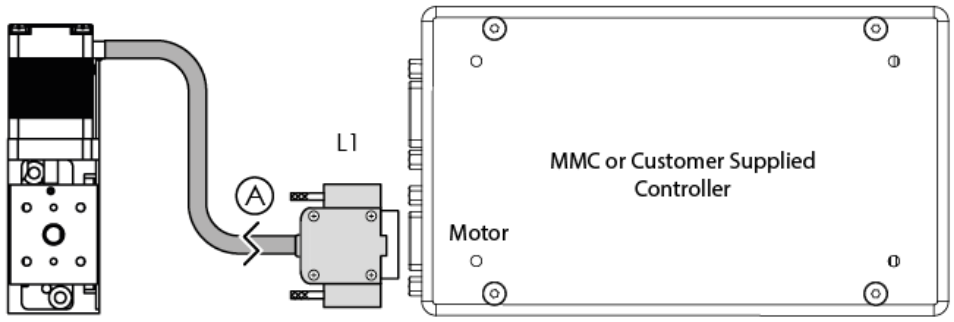

5.1.2 Closed Loop/Encoder Installation & Wiring Diagram

Using the VT-21 stage with an encoder requires a closed loop compatible controller that recognizes encoder feedback. Connect the stage as shown below in the *Encoder Wiring Diagram*.

5.1.2.1 Analog Encoder Wiring Diagram

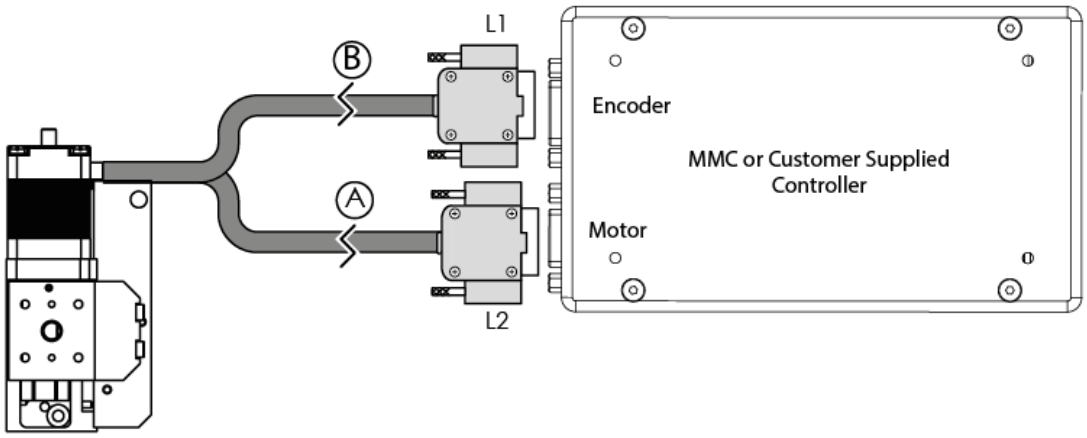

5.1.2.2 Digital Encoder Wiring Diagram

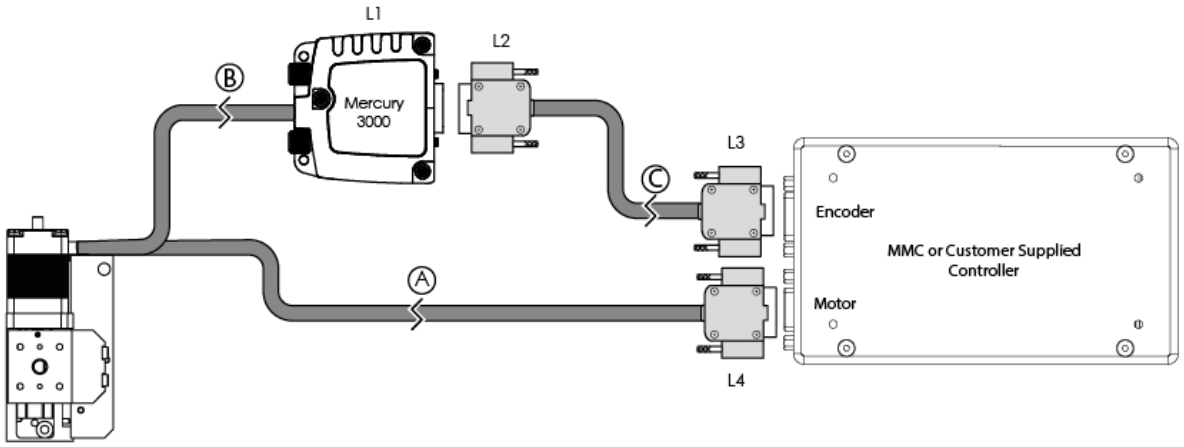

5.2 Vacuum Environments

5.2.1 Handling and Preparation

The vacuum version of the VT-21 is non-anodized and prepared for use in vacuum environments. When preparing the stage for vacuum environments, take the necessary precautions (such as wearing gloves, clean room/clothing, etc.) when handling the stage to avoid any contaminants. The connectors that ship with the stage are for testing use only and should be replaced with permanent connectors prior to installation.

5.2.2 Open loop Installation & Wiring Diagram

Connecting the VT-21 in an open loop requires the use of a feed through connector at the vacuum chamber wall. The vacuum compatible VT-21 will be supplied with wiring for a straight through feed through not a cross over gender changer. MICRONIX USA supplies test connectors that simulate the vacuum feed through to allow for functionality testing prior to installation in a vacuum chamber. For details regarding the pin-out and feed through specifications see the Appendix A.2.

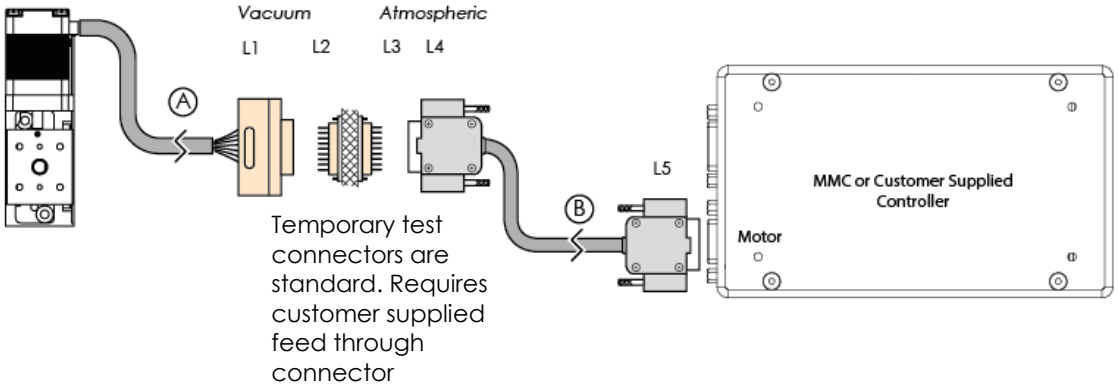

5.2.3 Closed Loop/Encoder Installation & Wiring Diagram

Installing the VT-21 stage with encoder in vacuum environments requires an intermediate feed through connector at the vacuum chamber wall that can accommodate both the motor cable, and the encoder cable. For details regarding the pin-out and feed through specifications see the Appendix A.3 and A.4.

Important: Match wire colors when connecting the Encoder Head (vacuum side) to the Encoder Module (atmospheric side). Also, connect the shield of the Encoder Head to the shield of the Encoder Module through the feed through connector.

5.2.3.1 Analog Encoder Wiring Diagram

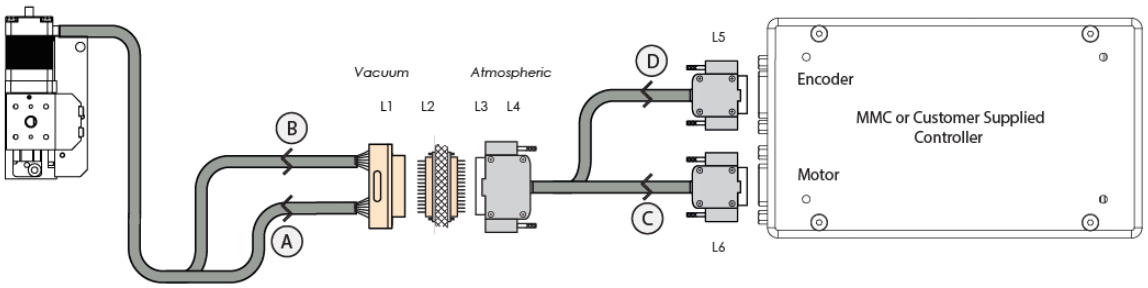

5.2.3.2 Digital Encoder Wiring Diagram

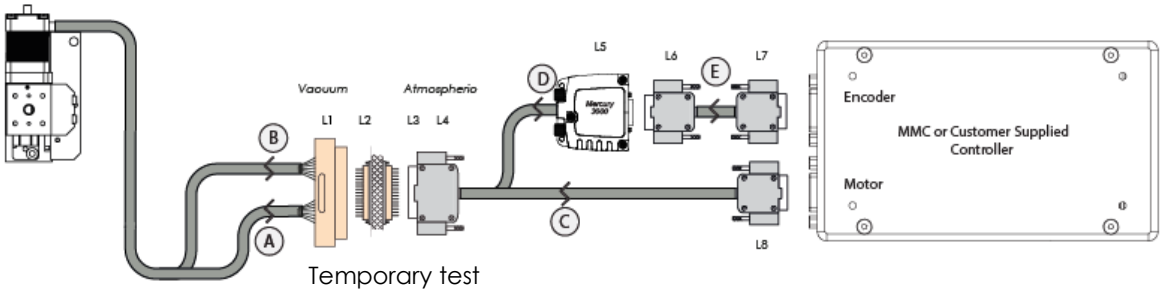

Temporary test connectors are standard. Requires customer supplied feed through connector

6. Dimensions

6.1 Dimensions

6.1.1 *VT-21 10mm*

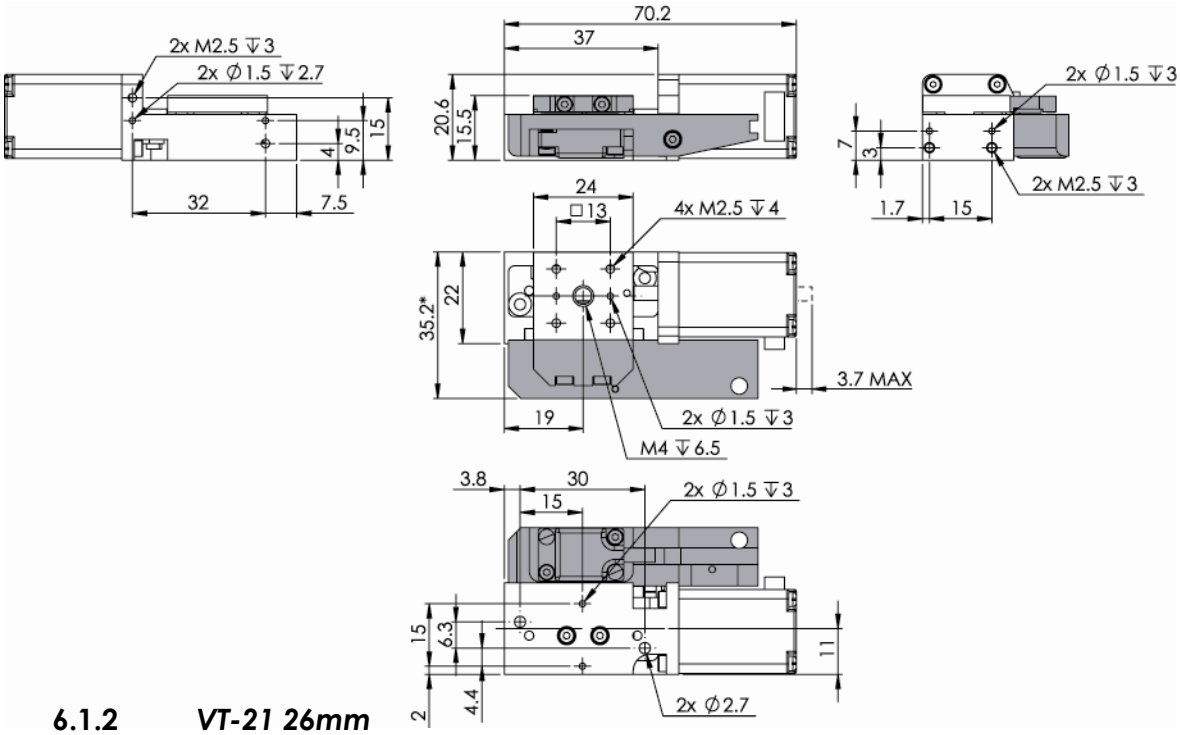

6.1.2 *VT-21 26mm*

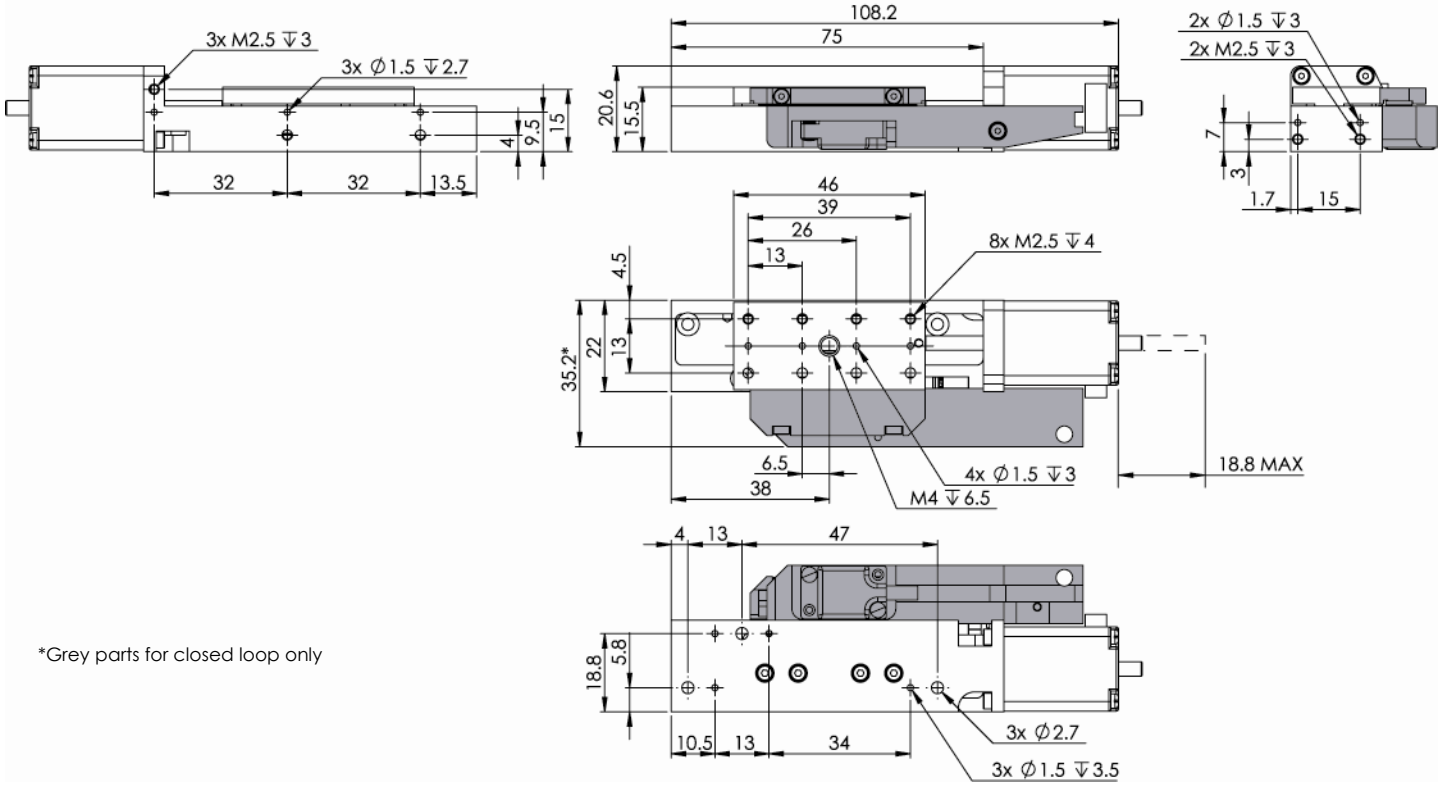

*Grey parts for closed loop only

7. Stacking Configurations

7.1 Configuration Examples

- Additional configurations available upon request
- Note: Stacking compatibility for all motor configurations.
- Positioning according to:

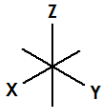

Using Adapter Block (P/N: 430141)

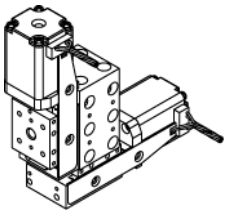

X-Z 10x10 mm

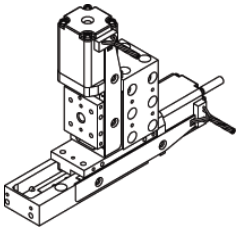

X-Z 26x10 mm

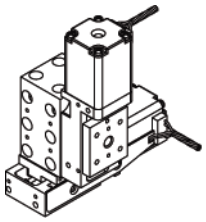

X-Z 10x10 mm

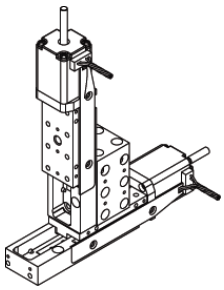

X-Z 26x26 mm

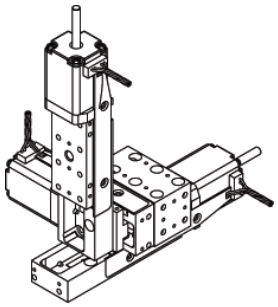

X-Y-Z 26x26x26 mm

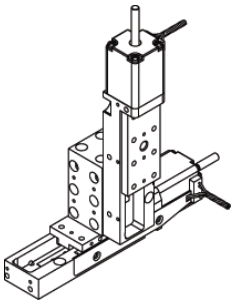

X-Z 26x26 mm

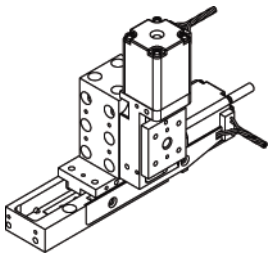

X-Z 26x10 mm

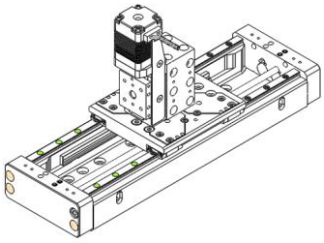

X-Z 100x10mm
[with PPS-60 Linear Stage]

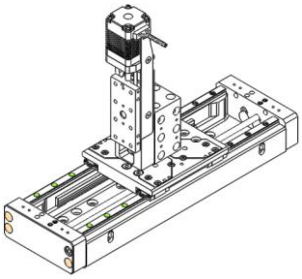

X-Z 100x26mm
[with PPS-60 Linear Stage]

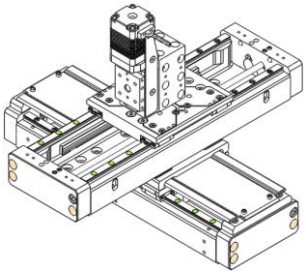

X-Y-Z 100x100x10mm
[with PPS-60 Linear Stages]

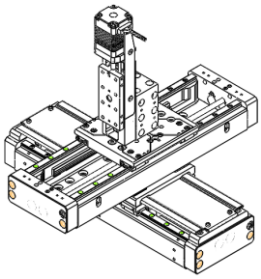

X-Y-Z 100x100x26
[with PPS-60 Linear Stages]

Using: Adapter Plate (P/N: 430169)

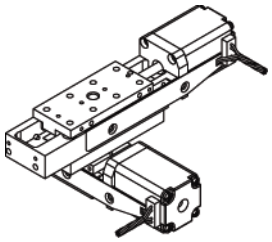

X-Y 10x26 mm

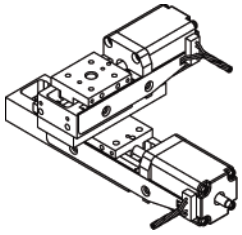

X-Y 26x10 mm

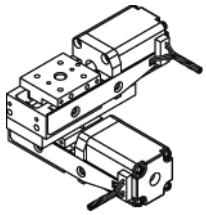

X-Y 10x10mm

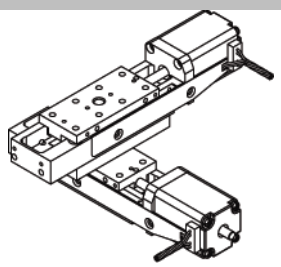

X-Y 26x26 mm

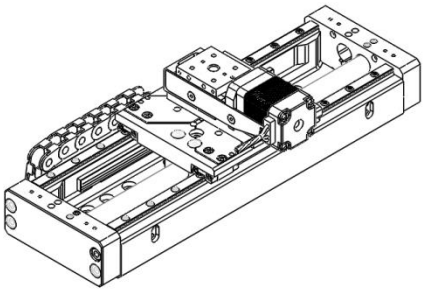

X-Y 100x10mm
[with PPS-60 Linear Stage]

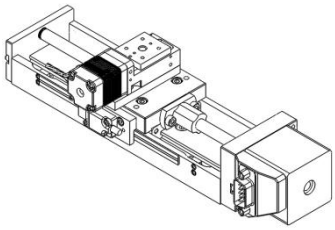

X-Y 10x100mm
[with VT-50 Linear Stage]

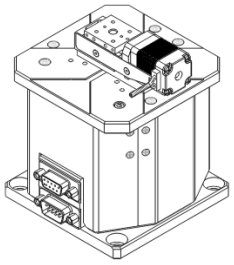

Y-Z 10x35mm
[with PZS-90 Elevation Stage]

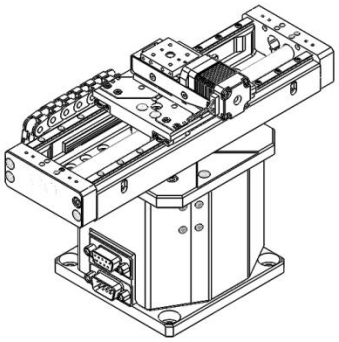

X-Y-Z 100x10x35mm
[with PPS-60 Linear Stage
& PZS-90 Elevation Stage]

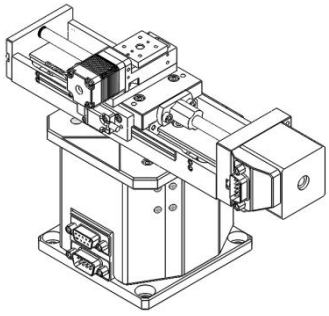

X-Y-Z 10x100x35mm
[with VT-50 Linear Stage
& PZS-90 Elevation Stage]

8. Supplementary Information

8.1 Maintenance

- The VT-21 series of linear stages utilizes a maintenance free design. Do not modify the stage or perform any maintenance unless specifically instructed to do so by MICRONIX USA personal. If the stage is not performing up to the original specifications, please contact MICRONIX USA.
- The VT-21 linear stage is a precision mechanical device and should be handled with care. Do not drop or mishandle the stage.
- Keep hands clear of all moving parts while the stage is in motion to avoid personal injury.
- Do not touch the leadscrew, as this will contaminate the lubrication and jeopardize the longevity of the stage.
- **Caution: Do not manually rotate the leadscrew.** The leadscrew does not rotate in this stage. Using pliar or other tools to attempt to rotate the leadscrew may cause permanent damage to the stage.
- Follow the *Safe Operating Environment* requirements and use proper cable management to ensure a clean and safe operating environment.
- Properly wire the feedback to the controller before powering on the stage. Failure to do so can result in damage to the stage.

8.2 Accessories

430107 Adapter Base Plate, Table	430141 Adapter Block	430169 Adapter Plate, XY, Base
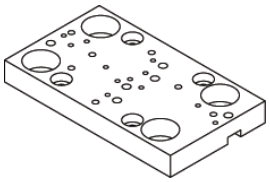	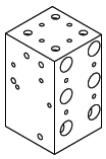	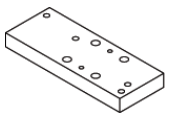
Used for mounting to an optical table with 1" or 25mm square hole patterns	Used in X-Y or X-Z configurations	Used for X-Y configurations, attaches carriage to base

8.3 Units and Conventions

All measurements in this document are in the metric system of units.

Metric Unit	English Unit
1 millimeter	0.0394 inches
1 micron	0.0000394 inches
1 Newton	0.2248 lbs.
1 Newton-meter	8.85 in-lbs.

A. Appendix

A.1 Technical Specifications

A.1.1 Electrical Connections

A.1.1.1 Motor Pinout & Cable

		Wire Color	
Pin	***Function***	**Atmospheric**	**Vacuum**
1	***Motor A+***	**Green**	**Green**
2	***Motor A-***	***Green & White***	***Green & White***
3	***Motor B+***	***Red & White***	***Red & White***
4	***Motor B-***	**Red**	**Red**
5	***Limit Switch GND***	**Brown**	**Brown**
6	**Limit Switch +**	**White**	**White**
7	**Limit Switch -**	**Violet**	**Violet**
8	**Not Used**	**Not used**	
9	**Not Used**	**Not used**	

- For vacuum prepared wiring, blue may be substituted for green/white, and black for red/white

A.1.1.2 Encoder PinOut

Pin	***Function***	**Low Cost Digital**	**Analog**
1	***A+/Cos+***	**Brown**	**Brown**
2	***B+/Sin+***	**Grey**	**Yellow**
3	***Index+***	**Violet**	**Violet**
4	***GND***	**Black & Inside shield**	**Black & Inside shield**
5	***+5V***	**Red**	**Red**
6	**A-/Cos-**	**Orange**	**Orange**
7	**B-/Sin-**	**White**	**Green**
8	**Index-**	**Blue**	**Blue**
9	**N/A**	**N/A**	**N/A**
Shield	**GND**	**Outside Shield**	**Outside Shield**

A.1.1.3 Stepper Motor Specifications

Motor Type	2 Phase Bipolar
Phase Current	0.24 A max.
Step Angle	1.8 °
Steps	200
Coil-Resistance	20.4 Ohms
Coil-Inductance	5 mH
Pitch	0.5 mm/rev
Resolution/Full step	2.5 µm

A.1.2 Limit Switches

The limit switches are normally closed (when not activated) and should be connected to a compatible controller that recognizes these settings. Failure to properly set up the limit switches in the controller can result in physical damage to the switches themselves. A hard stop is designed into the VT-21 body which will prevent the carriage from running away should the limit switches fail.

The limit switches are factory calibrated to ensure advertised travel length and cannot be adjusted by the customer. For custom travel lengths, please contact MICRONIX USA.

A.1.2.1 Mechanical Limit Switches

Contact Rating	100 mA @ 30 V
Contact Type	Normally Closed
Operating Temperature	-25 to +70 °C

A.1.2.2 Limit Switch Schematic

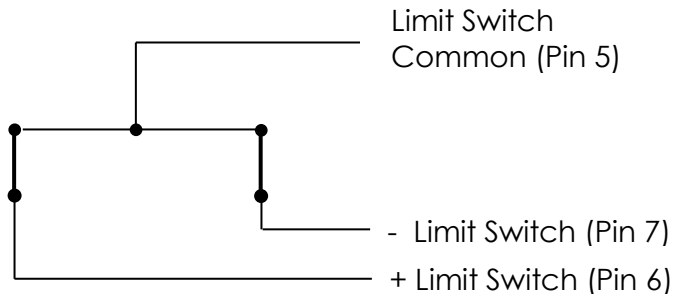

A.1.3 Direction of Motion

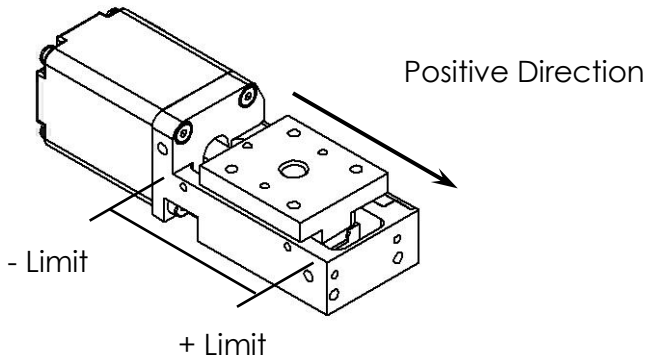

VT-21 Shown in center position

A.2 Open Loop Vacuum Wiring Diagram

Standard Cable Descriptions:

A. VT-21 Motor Cable - Vacuum Side (Female Dsub 9 Pin Peek Connector)
B. Atmospheric Motor Connector (Female Dsub 9 Pin to Male Dsub9)

Wiring Diagram:

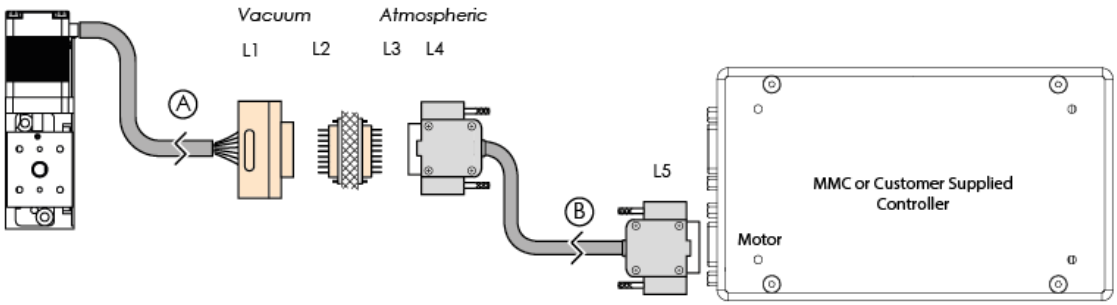

Connector Pinout

Description	*Color*	*L1*	*L2*	*L3*	*L4*	*L5*
Motor Phase A+	*Green*	*5*	*5*	*1*	*1 (Green)*	*1*
Motor Phase A-	*Green & White*	*4*	*4*	*2*	*2 (White - Green TP)*	*2*
Motor Phase B+	*Red & White*	*3*	*3*	*3*	*3 (Black)*	*3*
Motor Phase B-	*Red*	*2*	*2*	*4*	*4 (Red)*	*4*
Limit Ground	*Brown*	*1*	*1*	*5*	*5 (Brown)*	*5*
Limit Switch +	*White*	*9*	*9*	*6*	*6 (White - Violet TP)*	*6*
Limit Switch-	*Violet*	*8*	*8*	*7*	*7 (Violet)*	*7*
Shield	*-*	*6*	*6*	*9*	*9 (Shield)*	*Casing*

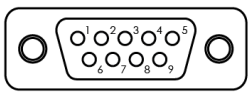

Female Dsub9 Connector - Rear View

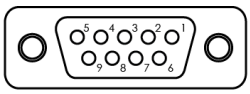

Male Dsub9 Connector - Rear View

-Motor

A.2.1 Straight Through 9-Pin Feed Through

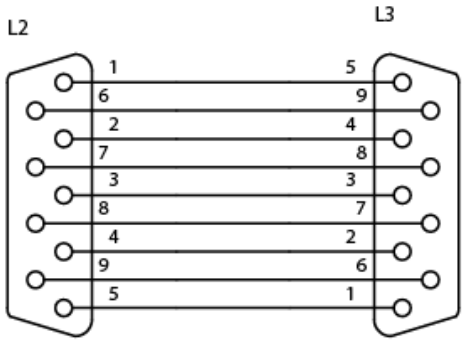

Male DB9 Male DB9

A.3 Using an Analog Encoder

A.3.1 Analog Encoder Overview

A VT-21 with Analog encoder will need to be paired with an appropriate controller that can interpolate the analog signal. The MMC-200 has an Analog option and will need to be configured for the VT-20 stage.

A.3.2 Operating and Electrical Specifications

Power Supply	5VDC ±5% @ 330mA (60mA for sensor)
Operating Temperature	0 to 70°C
Humidity	10 - 90% RH non-condensing

A.3.3 Analog Output (Pins 1, 2, 6, and 7)

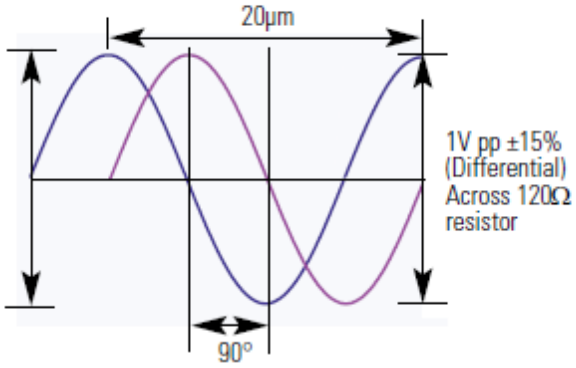

A.3.4 Index Window (Pins 3)

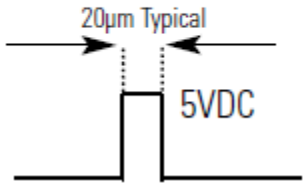

A.3.5 Resolution

All closed loop stages are supplied with 20µm scales. The interpolation is done in the MMC-200 to a higher resolution as specified in the order. With an analog encoder the MMC-200 has an achievable resolution of 10nm.

A.3.6 Analog Encoder Wiring Diagram

Standard Cable Descriptions:

A. VT-21 Motor Cable - Vacuum Side
B. VT-21 Encoder Cable - Vacuum Side
> (Female Dsub 15 Pin Peek Connector)

C. Atmospheric Motor Connector (Female Dsub 15 Pin to Male Dsub9)
D. Atmospheric Encoder Module (Female Dsub 15 Pin to Female Dsub9)

Wiring Diagram:

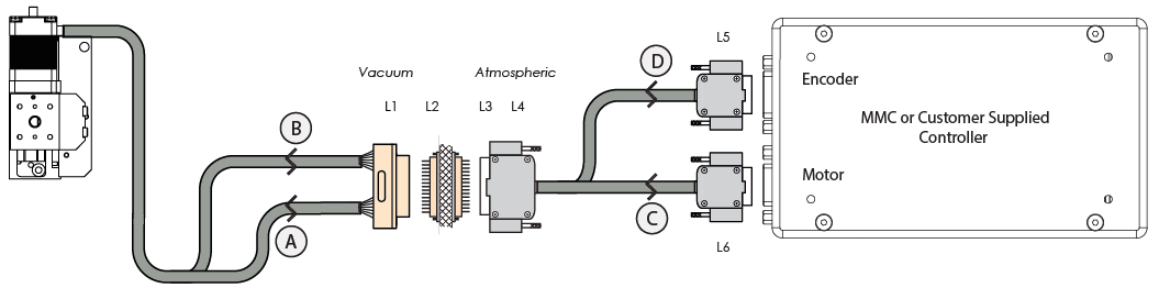

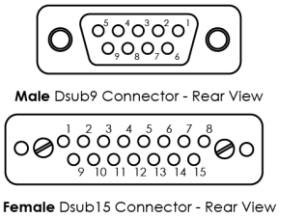

Connector Pinout

Description	*Color*		*L1*	*L2*	*L3*	*L4*	*L5*	*L6*
Motor Phase A+	*Green*		*1*	*1*	*8*	*8 (Brwn & Brwn Wht TP)*		*1*
Motor Phase B+	*Red & White*		*2*	*2*	*7*	*7 (Violet & Violet Wht TP)*		*3*
Limit Switch +	*White*		*3*	*3*	*6*	*6 (Blue)*		*6*
Enc Shield	*Shield*		*4*	*4*	*5*	*5 (Shield)*	*Casing*	
+5V	*Red*		*5*	*5*	*4*	*4 (Red)*	*5*	
Index+	*Violet*		*6*	*6*	*3*	*3 (Violet)*	*3*	
Cos+	*Brown*		*7*	*7*	*2*	*2 (Brown)*	*1*	
Sin-	*Green*		*8*	*8*	*1*	*1 (White - Yellow TP)*	*7*	
Motor Phase A-	*Green & White*		*9*	*9*	*15*	*15 (Grn & Grn Wht TP)*		*2*
Motor Phase B-	*Red*		*10*	*10*	*14*	*14 (Yellow & Yellow Wht TP)*		*4*
Limit Switch-	*Violet*		*11*	*11*	*13*	*13 (White - Blue TP)*		*7*
Ground	*Brown*	*Black*	*12*	*12*	*12*	*12 (Black/Black)*	*4*	*5*
Index-	*Blue*		*13*	*13*	*11*	*11 (White - Violet TP)*	*8*	
Cos-	*Orange*		*14*	*14*	*10*	*10 (White - Brown TP)*	*6*	
Sin+	*Yellow*		*15*	*15*	*9*	*9 (Yellow)*	*2*	

-Encoder
-Motor

A.3.7 Straight Through 15-Pin Feed Through

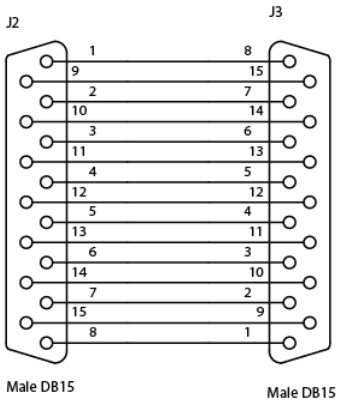

A.4 Using the Encoder Module

When connected, the Encoder Module should display two green LED's indicating a power source and proper encoder alignment. A Red or Yellow LED indicates misalignment of the Encoder Head, if this occurs contact MICRONIX USA. Do not manually adjust the Encoder Head or scale. For more information refer to MicroE Systems Mercury Encoders

A.4.1 Encoder Module Overview

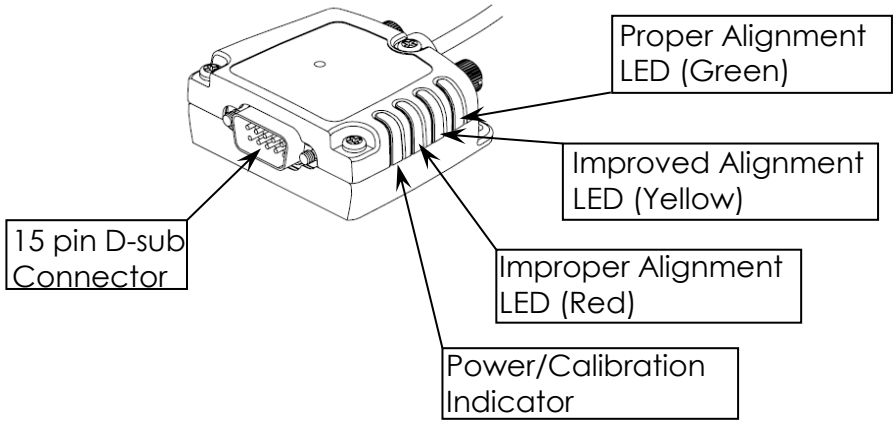

A.4.2 Encoder Module Pinout

Pin	Description	Pin	Description
1	Reserved	9	B-
2	Transmit**	10	B+
3	Receive**	11	Alarm**
4	A-	12	+5V
5	A+	13	Ground
6	Reserved	14	Index +
7	Reserved	15	Index -
8	Reserved		

*Note: Proprietary pins reserved for manufacturer programming, not required to be connected to controller.

A.4.3 Operating and Electrical Specifications

Power Supply	5VDC ±5% @ 330mA (30mA for sensor)
Operating Temperature	0 to 70°C
Humidity	10 - 90% RH non-condensing

A.4.4 Output Signals

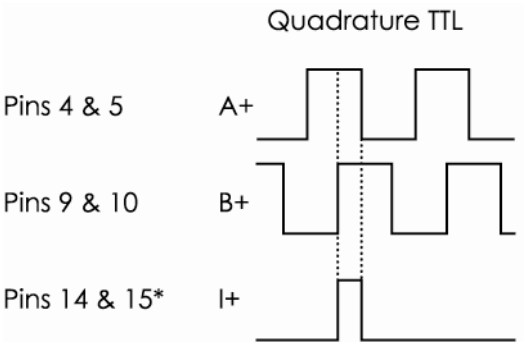

*Note: The index pulse may be aligned with A- or B- at some interpolation values.

A.4.5 Digital Encoder Wiring Diagram

Standard Cable Descriptions:

A. VT-21 Motor Cable - Vacuum Side
B. VT-21 Encoder Cable - Vacuum Side > (Female Dsub 15 Pin Peek Connector)
C. Atmospheric Motor Cable (Female Dsub 15 Pin to Male Dsub9)
D. Atmospheric Encoder Module Cable (Female Dsub 15 Pin to Mercury 3000 Interpolator Module)
E. Encoder Module Adapter Cable (Female HDsub 15 to Female Dsub 9)

Wiring Diagram:

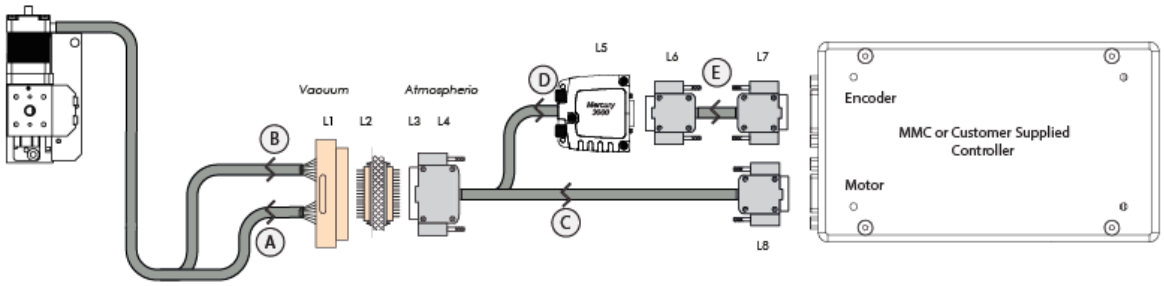

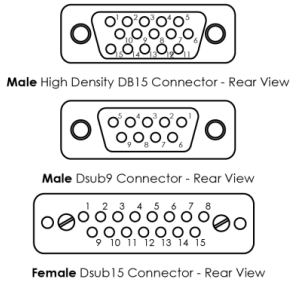

Connector Pinout

Description	*Color*	*L1*	*L2*	*L3*	*L4*	*L8*
Motor Phase A+	*Green*	*1*	*1*	*8*	*8 (Brwn & Brwn Wht TP)*	*1*
Motor Phase B+	*Red & White*	*2*	*2*	*7*	*7 (Vio & Vio Wht TP)*	*3*
Limit Switch +	*White*	*3*	*3*	*6*	*6 (Blue)*	*6*
Enc Shield	*Shield*	*4*	*4*	*5*	*5 (Shield)*	
+5V	*Red*	*5*	*5*	*4*	*4 (Red)*	
Index+	*Violet*	*6*	*6*	*3*	*3 (Violet)*	
Cos+	*Brown*	*7*	*7*	*2*	*2 (Brown)*	
Sin-	*Green*	*8*	*8*	*1*	*1 (Green)*	
Motor Phase A-	*Green & White*	*9*	*9*	*15*	*15 (Grn & Grn Wht TP)*	*2*
Motor Phase B-	*Red*	*10*	*10*	*14*	*14 (Yellow & Yellow Wht TP)*	*4*
Limit Switch-	*Violet*	*11*	*11*	*13*	*13 (White - Blue TP)*	*7*
Ground	*Black Brown*	*12*	*12*	*12*	*12 (Black/Black)*	*5*
Index-	*Blue*	*13*	*13*	*11*	*11 (Blue)*	
Cos-	*Orange*	*14*	*14*	*10*	*10 (Orange)*	
Sin+	*Yellow*	*15*	*15*	*9*	*9 (Yellow)*	

-Encoder
-Motor

- ***Note: For the pinout of cable E, refer to the appropriate MMC manual.***
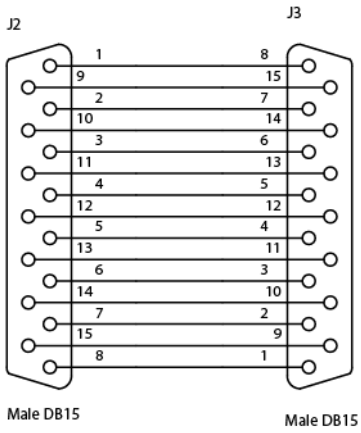
A.4.6 Straight Through 15-Pin Feed Through